ALPHA 374

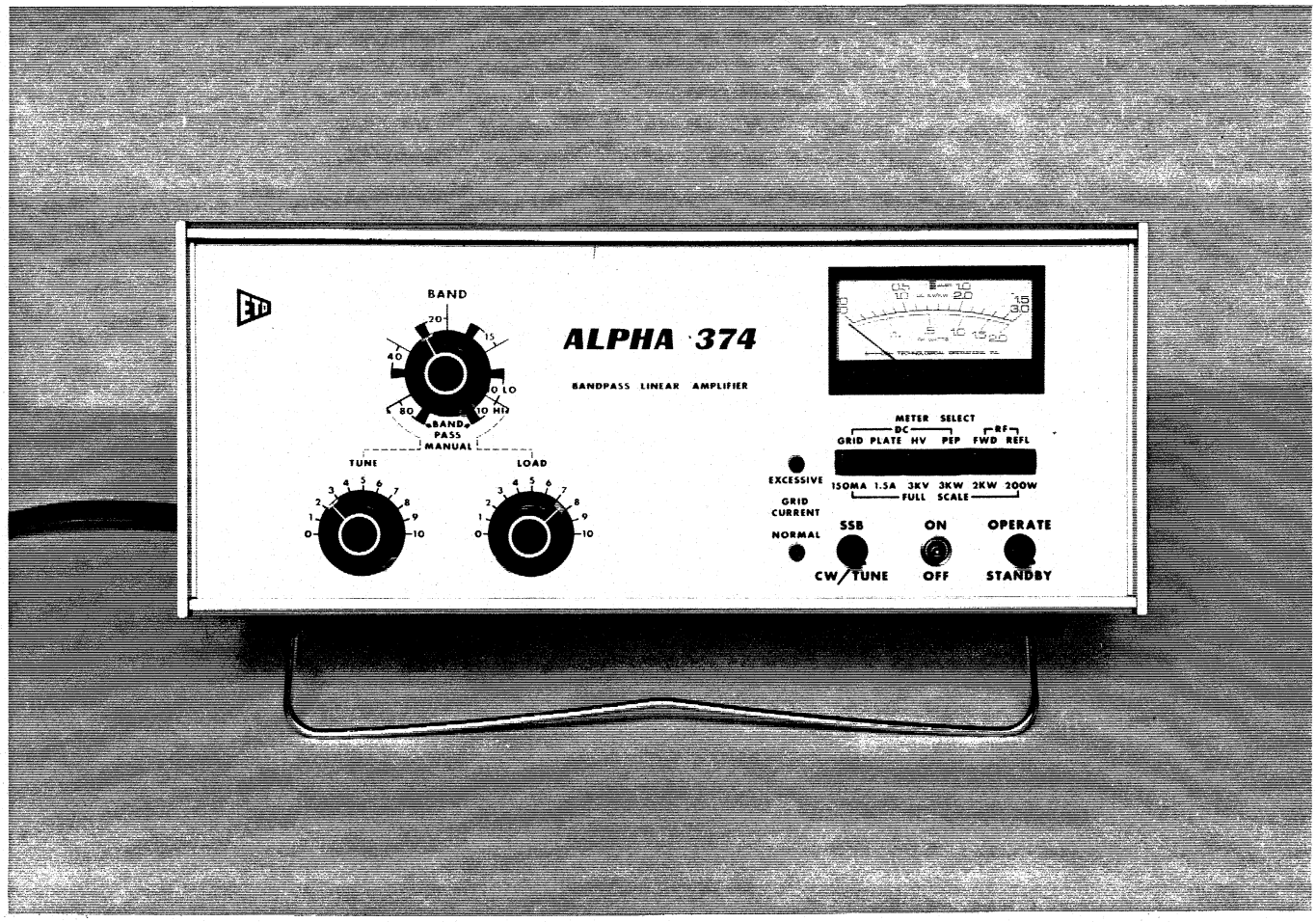

INSTRUCTION MANUAL

IMPORTANT!!

READ THIS INSTRUCTION MANUAL THOROUGHLY BEFORE APPLYING POWER TO THE AMPLIFIER! FAILURE TO DO SO MAY RESULT IN SERIOUS DAMAGE AND VOIDING OF WARRANTY!

TABLE OF CONTENTS

AMATEUR RADIO PRODUCTS WARRANTY ii

SECTION 1 - 1.1 GENERAL DESCRIPTION 1a

1.2 SPECIFICATIONS AND RATINGS 1a

SECTION 2 - INSTALLATION

2.1 UNPACKING 2a

2.2 TRANSFORMER INSTALLATION 2a

2.3 ELECTRICAL INSTALLATION 2b

SECTION 3 - OPERATION

3.1 CONTROL FUNCTIONS 3a

3.2 INITIAL AMPLIFIER ADJUSTMENT 3b

3.3 FINAL ADJUSTMENTS, MANUAL TUNING . . . 3e

3.4 FINAL ADJUSTMENTS, ALPHA 374 BANDPASS . 3g

3.5 OVERLOAD PROTECTIVE FUNCTIONS 3h

3.6 REDUCING EXCITER OUTPUT 3h

SECTION 4 - MAINTENANCE AND TROUBLESHOOTING 4a

SECTION 5 - THEORY OF OPERATION 5a

SECTION 6 - SCHEMATICS AND ILLUSTRATIONS 6a

SECTION 7 - PARTS LIST 7a

EHRHORN TECHNOLOGICAL OPERATIONS, INC.
P. O. BOX 1297 321 U. S. 98 NORTH
BROOKSVILLE, FL. 33512 (904) 796-1428

AMATEUR RADIO PRODUCTS WARRANTY

EHRHORN TECHNOLOGICAL OPERATIONS, INC. warrants each new ETO amateur radio product to be freefrom defective material or workmanship. If under normal conditions of use in accordance with published ratings and procedures the equipment malfunctions, it will be repaired at no charge to the owner for labor or materials provided tha t the malfunction is reported to the authorized ETO dealer from whom the unit was purchased, or directly to the ETO factory, within one year from date of sale to the original owner, and provided that the warranty registration form supplied has been fully completed and returned to ETO within 15 days after date of sale.

If, because of a malfunction occurring within 30 days of date of sale and in our judgment due to a manufacturing defect, return of an ETO product for factory service is authorized, ETO will pay shipping charges to and from any point within the continental U.S. via our choice of carrier. If the failure occursfrom 31 to 90 days after date of sale, ETO will pay return shipping charges only. All shipping charges attendant to equipment returned more than 90 days after date of original sale shall be borne by the owner.

CAUTION: DO NOT UNDER ANY CIRCUMSTANCES RETURN EQUIPMENT TO ETO WITHOUT SPECIFIC ADVANCE AUTHORIZATION FROM ETO. IF A MALFUNCTION IS SUSPECTED, CONTACT YOUR SELLING DEALER OR THE ETO SERVICE DEPARTMENT WITH FULL DETAILS OF THE TROUBLE BEFORE ATTEMPTING REPAIRS.

DO NOT SHIP EQUIPMENT IN OTHER THAN APPROVED FACTORY PACKING; BE CERTAIN TO REMOVE POWER TRANSFORMER BEFORE SHIPPING ANY UNIT WHICH WAS SHIPPED FROM THE FACTORY WITH TRANSFORMER REMOVED.

This warranty does not cover any product which has been subjected to misuse, neglect, accident, incorrect wiring not our own, improper installation, or to use in violation of specifications and instructions furnished by us, nor to units repaired or altered by persons not authorized by us, nor in cases where the serial number has been removed, altered, or defaced, nor to transmitting tubes.

Transmitting tubes are warranted by their manufacturer and the warranty is administered by ETO.

This warranty is in lieu of all other warranties expressed or implied and no representative or person is authorized to assume for ETO any other liability in connection with our products.

ETO reserves the right to change or improve its products as it may deem desirable, without obligating itself to make such changes or improvements available for its previously manufactured products.

EHRHORN TECHNOLOGICAL OPERATIONS, INC.

Brooksville, Florida 33512

SECTION 1

1.1 GENERAL DESCRIPTION

The ALPHA 374 and ALPHA 274 are high power linear amplifiers incorporating major advances in engineering and construction. They are rated for continuous service at maximum legal amateur power (FCC rules) in SSB, CW, FSK, and SSTV modes.

Exceptional power capability is achieved in combination with uniquely compact size and modest weight through the employment of a variety of advanced components, including state-of-the-art Eimac ceramic tubes, a power transformer with tape-wound core of grain-oriented silicon steel, and ETO's exclusive ducted-air cooling system.

The ALPHA 374 is capable of delivering normal power output, into a reasonably well-matched load, across all amateur bands from 3.5 through 30 MHz without manual tuning adjustments.

1.2 SPECIFICATIONS AND RATINGS

Frequency Coverage: ALPHA 374 - Bandpass or manually tuned all amateur bands 3.5 through 30 MHz. ALPHA 274 - Manual tuning only. Substantial band-edge overlap for MARS, etc.

Maximum Power Input: ALPHA 374 - 3 kilowatts PEP SSB or 1.2 KW average d-c or carrier, continuous duty. ALPHA 274 - 2.2 KW PEP SSB or 1.0 KW average d-c or carrier.

Drive Requirements: Approximately 30 to 40 watts drive per kilowatt d-c input, using either average or PEP figures.

Input Impedance: Nominal 50 ohms resistive; input SWR typically less than 1.5:1 at any frequency in range covered.

Output Impedance: Nominal 50 ohm resistive load, SWR not to exceed 1.5:1 for ALPHA 374 "bandpass" operation or 2:1 for manually-tuned operation of either model.

Tube Complement: ALPHA 374 - (3) Eimac 8874; ALPHA 274 - (2).

Primary Power: 120/240 V, 3 wire with neutral, 50-60 Hz, 1 Ø. Contact factory for information on other arrangements.

Physical: Self-contained in one designer-styled extruded aluminum cabinet with folding tilt stand. Overall size: 7½" H x 17" W x 13" D. Weight: 52 pounds net; 60 pounds shipping in two cartons suitable for UPS or air freight.

SECTION 2 - INSTALLATION

2.1 UNPACKING: Open larger shipping carton and carefully remove amplifier. Remove transformer from smaller carton, handling with care to avoid possible damage to leads or connectors.

IMPORTANT: SAVE ALL PACKING MATERIAL FOR RE-USE; ANY SHIPMENT OF THE EQUIPMENT IN OTHER THAN FACTORY PACKING, OR WITHOUT REMOVING POWER TRANSFORMER, MAY VOID WARRANTY.

Inspect thoroughly for shipping damage. Remove the two screws securing rear flance of top cover and slide it open. Inspect interior for damage, loose parts, etc. In the event of damage notify dealer or ETO immediately. Complete and return warranty registration form to ETO immediately.

2.2 TRANSFORMER INSTALLATION: Locate a-c cover interlock switch assembly at top, right of rear panel and note exact mounting arrangement. Remove two flat head screws and all hardware, allowing interlock assembly to hang by its leads over top of rear panel. Remove tape securing 12-pin socket (part of the main wiring harness) to filter capacitor; temporarily tuck socket out of the way to left of filter capacitor. Remove the four ¼-20 bolts and washers from transformer base.

Set transformer outside right, rear of amplifier cabinet, oriented so that the two "arms" of its "H" shaped mounting base run left-right, with the short transformer wiring harness positioned along the right top edge of the transformer and around the front corner so that the 12-pin plug is at the top-front-center of the transforme r with pins facing left. Very carefully lower transformer into position behind the filter capacitor, visually aligning the mounting holes. (It may be helpful to rig a simple "sling" of glass-reinforced tape, or wire, as an aid in handling the heavy transformer.)

Position amplifier so its right edge extends 2 to 3 inches over edge of table, exposing the two outer transformer mounting holes; install 2 bolts with washers provided (from below cabinet) but do not tigh ten. Tip amplifier up onto its left end and install two remaining bolts. Check to insure that all four sides of transformer are clear of nearby surfaces, then tight en all four mounting bolts securely.

Check the mating 15-pin connectors for proper pin orientation and push them fully together. DO NOT STRESS CAPACITOR STUDS SUPPORTING BOARD!

Re-mount interlock as before; close cover fully and replace the two screws which secure it to rear panel.

1: Note - If operation on other than 120/240 volt-with-neutral (3 wire) power is required, see section 3.7 before installing transformer.

2.3 ELECTRICAL INSTALLATION: Unless otherwise specified, the amplifier is shipped wired for operation from a standard 220 to 250 volt, 3-wire-with-neutral, single phase power source of 50 to 60 Hz. The green wire in the power cable must be connected to the source neutral wire. (120-N-120V)

Service wiring of #12 gauge copper or equivalent, provided with 15 or 20 ampere fuses, is adequate. TO OPERATE WITH ANY POWER SOURCE NOT AS DESCRIBED, CONTACT THE FACTORY.

RF OUTPUT - DO NOT OPERATE THE AMPLIFIER AT ANY TIME WITHOUT A PROPERLY IMPEDANCE-MATCHED LOAD CONNECTED TO THIS RECEPTACLE. Use a standard PL-259 type ("UHF") plug and RG-8/U coax.

RF INPUT - Connectthis jack to the RF output of exciter or transceiver using RG-58/U cable and an "RCA phono" type plug. With amplifier in the receive condition, in STANDBY, or OFF, the exciter/transceiver is connected thr ough to the load, as required for normal receive antenna connection (or "bare-foot" exciter operation) by all popular exciters and transceivers.

RLY - An external short must be connected across this jack on transmit in order to actuate the internal changeover relays. Use a standard "phono" type patch cable, which will normally plug directly into a corresponding "relay" jack on the transceiver/exciter providing a contact closure on transmit only.

ALC - A negative-going ALC voltage is available at this jack for use with transceivers/exciters equipped with external ALC input jacks. Use a standard "phono" patch cable. See sections 3.2 and 3.6 for additional information.

AUX - Plus 24 volts d-c is available at this jack to power low-current-drain accessories, such as an optional electronic T/R switch, designed for use with the ALPHA 374 or ALPHA 274.

FUSES - Use only 10 ampere*, 250 volt ceramic body fuses, Buss type ABC or Littlefuse type 3AB. Standard glass fuses may cause amplifier damage. Blowing of one or both fuses generally signifies either (1) excessive average plate power input or (2) a fault in the high voltage power supply. TO AVOID POSSIBLE EQUIPMENT DAMAGE, DO NOT REPLACE BLOWN FUSE(S) UNTIL SOURCE OF TROUBLE IS LOCATED AND CORRECTED. (See section 3.5 for additional information on fuses and protective circuits.)

*Change to 20 ampere fuses for 120 volt operation.

CAUTION! Do not physically locate the amplifier so that normal air intake or exhaust air flow is obstructed; keep it at least six inches in front of walls, draperies, etc.

WARNING: DO NOT APPLY A-C POWER TO THE AMPLIFIER WITH COVER OPEN! SERIOUS POWER SUPPLY DAMAGE NOT COVERED UNDER WARRANTY MAY RESULT. (See section 3.5 for additional information.)

3.1 CONTROL FUNCTIONS:

ON-OFF - Momentarily lifting the switch toggle applies a-c power to the amplifier (internals relays close and fan starts); when the electronically-controlled warm-up time delay of approximately 60 seconds is complete, the meter face will light up indicating "amplifier ready." Depressing the ON-OFF toggle momentarily will remove all a-c power.

OPERATE-STANDBY - In STANDBY amplifier T/R relays are locked in the receive position; antenna is internally "fed-through" back to the RF INPUT jack, permitting normal exciter/transceiver operation without the amplifier. In OPERATE the amplifier T/R relays are controlled by the external RLY line. The OPERATE-STANDBY switch also may be used to reset a grid overcurrent relay latch-out condition (see section 3.5).

SSB-CW/TUNE - In the CW/TUNE (down) position, operating conditions are proper for continuous carrier or low power operation (up to 1.2 KW input) of the ALPHA 374, or for manual tune-up. Maximum efficiency at power inputs of 1 KW or less will nearly always be achieved in this position, particularly in bandpass operation. In the SSB position, operating conditions are optimum for single sideband operation at up to 3 KW PEP input.

METER SELECT - Pushbuttons select the parameter to be displayed by the panel meter, as follows:

- GRID - Total grid current; .15 ampere (150 ma) full scale.
- PLATE - Total plate current; 1.5 amperes full scale.
- HV - Plate voltage; 3 KV (3000 volts) full scale.
- PEP - Approximate repetitive peak d-c power input under voice modulation; isolated high peaks are absorbed, to provide a useful indication of "effective" PEP input. 3 KW.
- FWD - Forward (incident) rf power; under voice modulation meter indicates approximate repetitive peak envelope power (PEP) rf output; 2 KW full scale (red meter scale).
- REFL - Reflected (reverse) rf power; 200 watts full scale.

GRID CURRENT - Green and red light-emitting diodes (LED's) provide instantaneous visual monitoring of excitation level:

- NORMAL (green) - Begins to glow at approximately 90 ma grid current, the minimum level normally needed for good efficiency
- EXCESSIVE (red) - Begins to glow dimly as grid current approaches the high end of its linear operating range(and ALC threshold) -- typically at about 100 to 130 ma d-c.

Severely excessive excitation (grid current above 150 ma) will latch the grid overcurrent protective relay, locking the amplifier relays in the receive mode and steadily illuminating the red EXCESSIVE GRID CURRENT LED even after excitation is reduced or removed. Relay is reset by momentarily switching the exciter to receive (release VOX or PTT) orthe amplifier to STANDBY. Correct the exciter output level before resuming transmission.

BAND - Sets operating frequency range of amplifier and, in the ALPHA 374, selects BANDPASS or MANUAL tune-load mode. Functions as a conventional bandswitch in the ALPHA 274.

With ALPHA 374 set to the wider index mark on a given band, internally pre-set bandpass filters are connected for that band and the front panel manual TUNE and LOAD controls have no effect. The narrower band index marks correspond to the manual tuning mode, switching in those front panel controls. NOTE: The position marked "10 LO" is intended for bandpass operation from 28 to 29 MHz, "10 HI" for 29 to 29.7 MHz.

TUNE - In the ALPHA 274 and on the MANUAL bandswitch positions of the ALPHA 374, this knob controls plate tuning of the pi-L output network. Minimum capacitance occurs at scale "0."

LOAD - Controls the degree of (manual) plate loading. Under most load conditions minimum loading occurs at maximum capacitance, scale "0." This relationship may reverse on the two lowest frequency ranges (80 and 40 meters) with certain loads.

3.2 INITIAL AMPLIFIER ADJUSTMENT: It is absolutely essential that any linear amplifier be properly loaded, tuned, and driven in order for it to deliver normal power output with low distortion and without the danger of internal damage.

Loading, tuning, and drive levels are always inter-dependent; by far the most conclusive way to confirm and maintain safe and correct operating conditions is through continuous use of an in-line monitoring oscilloscope. Such an instrument is simple to use and provides at-a-glance indication of normal (or abnormal) overall amplifier operation.

In any case it is extremely important tha t operating procedures outlined in this manual be faithfully followed, especially so if a monitoring oscilloscope is not used regularly. Damage resulting from abuse and/or abnormal operation, whether inadvertent or intentional, is not covered under warranty.

At least 80% of all equipment "problems" and damage result directly from the user's failure to read, understand, and follow basic operating instructions!

PRELIMINARY CHECKS - Before attempting to operate the ALPHA 374 or ALPHA 274 on any particular frequency, certain important conditions must be met for safe and proper performance:

(1) For manually-tuned operation the load SWR must not exceed approximately 2:1, as indicated by a ratio of forward rf power (FWD) to reflected rf power (REFL) of 10:1 or more. Although the amplifier rf wattmeter accuracy is degraded at forward power levels less than 500 watts, a preliminary safe-SWR check may be made by feeding full exciter carrier output through the (turned OFF) amplifier to the antenna and noting the meter deflections for FWD and REFL. Because of the 10:1 difference in meter scale factor, a REFL needle deflection no greater than the FWD deflection indicates an approximate FWD/REFL

of 10:1 or more, safe for manual operation.

(2) For ALPHA 374 BANDPASS operation the load SWR should not exceed 1.5:1; a FWD-to-REFL power ratio of at least 25:1 satisfies this requirement. This check should be made with a FWD power of 500 watts, normally achieved by manually adjusting the amplifier for 1 KW d-c CW input (as described in section 3.2 below) and then touching-up exciter output as necessary to set the FWD power reading at 500 watts (.5 on red scale). A load SWR acceptable for ALPHA 374 BANDPASS operation is indicated if the corresponding REFL reading is no greater than about 20 watts, or mid-way between 0.1 and 0.5 on the red meter scale.

(3) If the maximum exciter or transceiver output is in the range of about 50 to 140 watts, little difficulty should be experienced in setting the proper drive level to the amplifier. The use of ALC may be convenient. With transceivers in the 150 watts-and-up output class it is extremely desirable that ALC feedback and/or other suitable measures be employed to prevent severe overdrive. (See section 3.6 for specific suggestions.) The maximum exciter output is approximately the FWD rf power reading noted in preliminary check (1) above; a reading of 0.1 on the red scale corresponds to 100 watts FWD power.

MANUAL TUNE-UP - This procedure applies to manual tune-up of both the ALPHA 374 and ALPHA 274. Since the ALPHA 374's band-pass filters are designed to provid e optimum efficiency when operating on high power SSB (2 to 3 KW PEP input) into a matched 50 ohm resistive load within the amateur bands, some improvement in power output and efficiency may frequently be achieved by MANUAL tuning when these conditions do not all exist. For example, if it is desired to run one kilowatt d-c power input on CW, FSK, or SSTV, or into a mismatched antenna, or on an out-of-band MARS frequency, the ALPHA 374 will probably deliver somewhat greater power output when carefully tuned and loaded manually, as compared with BANDPASS operation. The following tune-up procedure has been found to produce excellent results:

3.2.1 Set amplifier switches to STANDBY and CW/TUNE; apply a-c power (listen for relay closures and fan start.)

3.2.2 Set BAND, TUNE, and LOAD controls in accordance with the INITIAL CONTROL SETTINGS (Table I below) for the frequency band to be used.

TABLE I - ALPHA 374/274 INITIAL CONTROL SETTINGS

BAND (MANUAL)	TEST.FREQ.	TUNE	LOAD
80	3.75 MHz	4	6
40	7.15	4	3
20	14.20	1	7
15	21.20	1	8
10	28.50	1	9

3.2.3 Tune up exciter or transceiver in accordance with its manufacturer's instructions (with amplifier in STANDBY, the exciter output feeds through directly to the load).

Return exciter rf output control to zero and the exciter to the receive condition.

3.2.4 If amplifier meter scale is illuminated, indicating "ready," press PLATE meter button and switch to the OPERATE condition.

3.2.5 Switch exciter to transmit an unmodulated carrier (i.e., CW, LOCK KEY, or TUNE mode); very slowly increase exciter power output from zero. Amplifier plate current should rise abruptly to 100 ma or more at very low drive level (0.1 watt), then continue to increase steadily as the excitation power rises.

STOP INCREASING EXCITER OUTPUT when amplifier plate current reaches 0.5 ampere (top, black meter scale).

3.2.6 Press FWD meter button. Carefully adjust first LOAD, then TUNE controls for maximum FWD meter indication; repeat until no further increase in output is seen.

3.2.7 Press PLATE button and note plate current. In TABLE IIa or IIb below, as appropriate, note the TUNE-UP PLATE CURRENT desired for intended mode of operation.

TABLE IIa - ALPHA 374 TUNING/OPERATING PARAMETERS (& '274 W/PK1)

EMISSION & PEAK INPUT	MODE SWITCH	TUNEUP PLT CURRENT	TYPICAL MAX. METER READINGS PLATE*	PEP*	FWD*	DRIVE PWR
CW/FSK@ 1KW	CW	.70-.90 A	.7-.8	1.0	.5-.7	50W
SSB @ 2-3KW	SSB	.80-1.0 A	.4-.6	1.2-2.4	.5-1.5	80-100

TABLE IIb - ALPHA 274 TUNING/OPERATING PARAMETERS

CW @ 1 KW	CW	.75 A	.75	1.0	.6-.6	50-100
FSK/SSTV@700W	CW	.50 A	.50	.7	.3-.5	35-70
FSK/SSTV@ 1KW	SSB	.40 A	.50	1.0	.5-.7	35-70
SSB @ 2 KW	SSB	.75 A	.3-.5	.8-1.6	.4-1.2	80-100

* NOTE: Peak meter indications during voice crests on SSB are extremely dependent upon voice and exciter characteristics, as well as whether ALC or more elaborate forms of speech processing are employed. The PEP and FWD meter functions indicate approximate values of d-c input power and rf output power averaged over words and phrases, not true instantaneous peak values.

3.2.8 Unless the actual plate current observed in step 3.2.7 above was within one scale division of the desired TUNE-UP PLATE CURRENT from the table, adjust exciter power output very slightly in whichever direction moves amplifier plate current toward the TUNE-UP desired value. Repeat steps 3.2.6 through 3.2.8 until observed plate current is within one scale division of the desired value. Return exciter to receive.

3.3 FINAL ADJUSTMENTS, MANUAL TUNING: At completion of step 3.2.8 the amplifier is very close to proper adjustment for the desired type of operation. The final "touch-up" adjustments described hereafter consist simply of trimming the excitation level (and possibly TUNE and LOAD controls in the case of CW, FSK, and SSTV operation) to secure peak performance at the exact power input desired.

Determining D-c Power Input - Average d-c power input (in watts) is simply the produc t of amplifier plate current (amperes) multiplied by the plate voltage (volts). In carrier modes such as CW, FSK, and SSTV the values of voltage and current may be read directly from the meter under key-down conditions. On single sideband voice, the average d-c power input (as defined by FCC rules) is approximately the product of the highest peak reading of the plate current meter on voice peaks times the corresponding (minimum) HV indication, which also occurs on voice peaks.

Typical combinations for 1 kilowatt d-c carrier input are approximately (.75 amperes) X (1320 volts) = 990 watts, OR (.45 amperes) X (2150 volts) = 970 watts. Typical meter readings on crests of SSB voice modulation are (.45 amperes) X (2150 volts) = 970 watts average d-c input.

3.3.1 SSB - MEDIUM POWER After completing tune-up through step 3.2.8, leave amplifier in the CW/TUNE position, switch exciter to SSB operation, and very slowly increase mike gain (or other rf output control) until the highest PLATE current meter indications with voice modulation reach the smaller of either (1) the highest normal value shown in applicable TABLE IIa or IIb, OR (2) the plate current value corresponding to the maximum average d-c power input desired, OR until the highest GRID meter indications reach the maximumlevels shown in the appropriate table II.

In all normal SSB operation the green "NORMAL" LED should flicker frequently during modulation, signifying adequate excitation for reasonably efficient amplifier operation. The red "EXCESSIVE" LED will flicker intermittently during normal operation as well, but constant bright flashing accompanied by frequent GRID current meter excursions above .05 ampere (50 ma) indicates overdrive leading to excessive distortion. When ALC is used, dim illumination of the red LED indicates the onset of ALC action (ALC threshold).

3.3.2 SSB - HIGH POWER For SSB power input above about 1 to 1.2 KW PEP, the amplifier should be placed in the SSB position of the SSB-CW/TUNE switch after initial tune-up. Final adjustment is otherwise exactly as in 3.3.1 above, taking care to select the proper value of desired maximum plate current.

WARNING: ALWAYS REMOVE EXCITATION COMPLETELY BEFORE OPERATING THE SSB-CW/TUNE, STANDBY-OPERATE, OR BAND SWITCHES. SEVERE AMPLIFIER DAMAGE MAY OTHERWISE OCCUR.

3.3.3 CW-FSK-SSTV The procedure given in step 3.3.1 is also applicable to final adjustment for carrier modes of operation such as CW, FSK, and SSTV. Since these modes do not require maximum amplifier linearity, however, some additional efficiency and power output may often be achieved by increasing excitation and grid current beyond the point of optimum linearity.

Upon completion of 3.3.1, increase excitation by a very small increment; if PLATE current increases beyond the desired operating value, adjust the LOAD control to return it nearly (but not quite) to that level, then carefully adjust TUNE control for minimum plate current. Check GRID current; if still less than .13-.15 ampere (.1 ampere for ALPHA 274), repeat procedure until the desired value of PLATE current is achieved simultaneously with such level of GRID current. FWD rf power output should be slightly greater than at conclusion of 3.3.1.

3.3.4 SLOW SCAN TV INTERSPERSED WITH VOICE SSB In general the amplifier should be adjusted in accordance with 3.3.1 (and 3.3.3 if desired) with the video signal applied to the exciter. When audio (voice) signals are to be transmitted, it is only necessary to adjust mike gain as required to avoid overdrive as evidenced by heavy, bright flashing of the RED LED and GRID meter excursions much beyond .05 ampere.

If maximum power voice is desired, REMOVE ALL VIDEO AND AUDIO SIGNALS OR RETURN EXCITER MOMENTARILY TO THE RECEIVE CONDITION, switch amplifier to SSB mode, then adjust mike gain (or other rf output control) for normal excitation level as in 3.3.2. BEFORE RETURNING TO VIDEO SIGNAL, REMOVE EXCITATION AND SWITCH AMPLIFIER BACK TO THE CW/TUNE MODE.

The amplifier may also be initially adjusted for normal SSB voice operation at about 2 KW PEP input in the SSB mode and left in that mode for video transmission PROVIDED THAT EXCITATION IS ADJUSTED SO THAT THE POWER INPUT WITH PICTURE DOES NOT EXCEED ONE KILOWATT D-C. This procedure will normally produce less picture power output (and higher plate dissipation) than proper SSTV video operation in the CW/TUNE amplifier mode.

3.4 FINAL ADJUSTMENTS, ALPHA 374 BANDPASS MODE ONLY: The preliminary checks described in section 3.2 (page 3c) must be performed to determine that load SWR is no greater than about 1.5:1, and therefore suitable for BANDPASS operation. Highest efficiency, however, will result if load SWR is 1.3:1 or less (2% REFL pwr).

3.4.1 Set BAND switch to the broader index line for the amateur band desired; use "10 LO" for 28-29 MHz, "10 HI" for 29-29.7 MHz. Set the SSB-CW/TUNE toggle switch to the appropriate position from TABLE IIa. Push PLATE.

3.4.2 With exciter/transceiver set up for the desired mode of operation, very slowly increase exciter output from zero (with normal modulation applied if SSB or SSTV) until either (1) the PLATE meter reaches the maximum indication desired for normal operation OR (2) the PLATE OR GRID meter maximum indication reaches the maximum value listed in TABLE IIa (excessive peak grid current will also be indic ated by heavy, bright flashing of the red LED indicator). On CW, FSK, or SSTV, excitation may be increased until grid current reaches .12 to .15 amperes maximum (bright illumination of the red LED), provided the maximum acceptable or desired plate current is not exceeded.

3.4.3 On SSB voice the final exciter output setting should be such that with normal voice modulation the highest PLATE meter deflections do not frequently exceed the maximum value determined by legal or rating considerations, and GRID meter peak deflections do not exceed approximately .05 amperes (red LED not brightly flashing).

3.4.4. Press FWD button and note highest meter reading on the red 0-2 KW scale under sustained, normal modulation. This reading, when transmitting CW (key-down), FSK, or SSTV should approximate at least 50% of the d-c power input calculated by multiplying d-c plate current times plate voltage (see 3.3). On SSB voice, note the highest meter reading with PEP button depressed, under sustained modulation; the highest FWD power indication should approximate at least 50% of the highest PEP indication with a well-matched load, or at least 40% otherwise.

3.4.5 In normal amateur (U.S.) "maximum legal power" SSB voice operation, approximate maximum meter readings on modulation peaks will be PLATE 0.4-0.5 amperes, GRID .03-.06 amperes, PEP 1.2-2.0 KW, and FWD 0.5-1.2 KW. IF ANY READING DIFFERS SUBSTANTIALLY FROM THESE FIGURES, AND ESPECIALLY IF GRID CURRENT IS MUCH HIGHER OR FWD POWER LOWER, CAREFULLY RE-CHECK THE LOAD SWR AND ALL ADJUSTMENTS.

3.4.6 Continuous monitoring of amplifier performance with an in-line rf oscilloscope - particularly in the case of BANDPASS ALPHA 374 operation with a moderately mismatched load - permits precise adjustment for optimum performance (maximum output, minimum distortion) to be accomplished very quickly and easily even while voice transmissions are being made. The utility of such a monitoring 'scope is great and can hardly be exaggerated.

3.5 OVERLOAD PROTECTIVE FUNCTIONS:

3.5.1 GRID OVERCURRENT RELAY - If amplifier grid current substantially exceeds normal maximum values, the grid relay automatically latches the internal T/R relay circuits in the receive condition. This occurrence is indicated by bright illumination of the red EXCESSIVE GRID CURRENT LED, even after excitation is reduced or removed. The grid relay is reset and normal operation restored by momentarily returning either the exciter to receive (release PTT or VOX) or the amplifier to STANDBY. CORRECT THE CAUSE OF EXCESSIVE GRID CURRENT BEFORE RESUMING OPERATION.

3.5.2 PLATE OVERCURRENT RELAY - The plate relay is actuated if d-c plate current exceeds the normal peak value, which may occur as a result of overly-heavy amplifier loading or load mismatch, overdrive, or a fault in the HV or plate circuits external to the power supply. Plate overcurrent actuation is equivalent to pressing the OFF power switch; all a-c power is removed. BEFORE RESTORING POWER BY OPERATING THE ON POWER SWITCH, SET THE OPERATE-STANDBY SWITCH TO STANDBY. Correct the cause of excessive plate current before resuming operation. Allow tubes to reach operating temperature for at least 10-15 seconds after restoring power, and be certain that excitation is removed, before switching the amplifier back to OPERATE.

3.5.3 PRIMARY LINE FUSES - As described in section 2.3, the blowing of one or both fuses gene rally indicates either (1) excessive average d-c plate input over a period of several seconds or longer (e.g., carrier operation at 2+ KW for more than 1-2 seconds) or (2) a fault in the transformer or high voltage power supply. UNLESS IT IS KNOWN THAT FUSE FAILURE WAS DUE TO TEMPORARILY-EXCESSIVE POWER INPUT, DO NOT REPLACE FUSES AND APPLY A-C POWER UNTIL THE PROBLEM HAS BEEN DETERMINED AND CORRECTED! TO DO OTHERWISE MAY RESULT IN DESTRUCTION OF TRANSFORMER, HV RECTIFIERS, STEP-START CIRCUITS, OR OTHER COMPONENTS.

CAUTION: THE HIGH VOLTAGE SHORTING "CROWBAR" SWITCH LOCATED ON THE HV RECTIFIER BOARD PLACES A LOW-RESISTANCE SHORT ACROSS THE HIGH VOLTAGE SUPPLY WHENEVER THE COVER IS OPEN UNLESS THE CROWBAR IS MECHANICALLY DISABLED. ALSO, THE AMPLIFIER TUBES DO NOT RECEIVE COOLING AIR WHEN COVER IS OPEN. DO NOT APPLY A-C POWER TO THE AMPLIFIER WITH THE TOP COVER OPEN!

3.6 REDUCING EXCITER POWER OUTPUT: If the exciter or transceiver used to drive the ALPHA 374 or ALPHA 274 amplifier is capable of substantially greater power output than the 100 watts nominally required for full-power SSB, some difficulty may be experienced in avoiding occasional overdrive due to exciter output "spikes." This problem may be avoided by taking any of several steps to effectively limit exciter peak output.

3.6.1 ALC CONTROL ALPHA 374 provides negative-going ALC voltage up to -5 to -15 volts maximum, depending on circumstances. (Contact factory for info on changing to positive-going ALC if required by transceiver.) The power level at which ALC control begins is set by ALC threshold trimpot R219, located near the top of plug-in board CB2. R219 should be adjusted so that, with voice SSB modulation, and with PLATE meter button depressed, the maximum swing of the meter on voice peaks is approximately 0.45 ampere, corresponding to (U.S.) maximum legal power of 1 kW average d-c input. Set exciter mike gain so that exciter ALC meter indication is normal; if no ALC metering is provided, set gain so that red EXCESSIVE LED on ALPHA flashes only on voice crests, not continuously.

3.6.2 REDUCED EXCITER LOADING The peak power output of exciters lacking satisfactory ALC capability may be reduced by initial tune-up of the exciter to provide less than maximum available output. In most cases this requires only that exciter loading be reduced so that, at full drive, exciter plate current and power output are reduced as desired.

3.6.3 REDUCING EXCITER OPERATING VOLTAGES Peak exciter output power may be reduced, if necessary, by lowering the applied plate, screen, or collector d-c voltages to the output or driver stages. This should be attempted only be personnel familiar with the equipment and capable of insuring proper operation under the changed conditions.

3.6.4 RF ENVELOPE CLIPPING In addition to usefully increasing 'talk power' under some conditions, a well-designed and properly-operated 'rf clipper' may be used to establish a controlled peak exciter output power level, provided an output control exists, or can be installed, between clipper output and the exciter final amplifier stage.

3.6.5 RF ATTENUATOR PAD A resistive attenuator may be installed between the exciter output and amplifier input to absorb excess drive power. It is necessary to switch the pad out on receive, or otherwise to insure that it does not also attenuate the received signal fed to the receiver.

3.7 OPERATING WITH PRIMARY POWER OTHER THAN 120/240 V, 3 WIRE WITH NEUTRAL:

3.7.1 120 VOLT OPERATION In short cable from transformer T1 to plug P1, note white/black and white/gray #16 wires spliced together and capped. Separate them, re-connecting white/black to the similar white/black wire coming from the plug P1 and previously un-connected to anything. Connect white/gray to white/gray, similarly. Remove cap of P1; note black jumper from pin 6 to pin 1. Remove this wire only from pin 1 and re-connect to pin 8. Install 20 ampere ceramic-body fuses, type 3AB or ABC. Connect power cable green wire to ground, white to 'cold' and black to 'hot' line wires.

3.7.2 240 VOLT, 2 WIRE OPERATION Note the #22 green wire on one lug of interlock switch S5; remove its opposite end only from the fan lug and re-connect to one lug of the upper fuse post (F1). Either (a) replace 700 ohm/8 watt resistor R1 with a 2000 ohm/25 watt resistor OR (b) insert an additional 1000-1500 ohm, 12 watt resistor in series with the existing 700 ohm unit. Remove cap from plug P1; remove black #22 jumper between pins 6 and 1. Connect a new wire to pin 6, route it out through the cap, and connect it to the existing junction of the short #16 white/black and #16 white/gray wires coming from the transformer and capped off within the cable. Connect cable to power source as in 3.7.1 above.

3.7.3 OPERATION FROM 120/208 VOLT 3 PHASE POWER, OR ALTERNATIVE ARRANGEMENTS FOR 240 VOLT, 2 WIRE CONNECTION -- Contact factory.

SECTION 4 - MAINTENANCE AND TROUBLESHOOTING

4.1 ROUTINE MAINTENANCE: Your ALPHA amplifier should be inspected at regular intervals and cleaned as necessary to prevent accumulation of dust and dirt. Any accumulation should be loosened with a soft brush and carefully removed with a vacuum cleaner. Particular attention should be given to high voltage and cooling airflow areas, including the high voltage receitifer board CB1, plate blocking capacitors C12 and C13, bypasses C14 and C15, the power transformer, blower, and the air intake and exhaust screens.

An occasional check should also be made to insure that cooling airflow is normal. With the palm of the hand held about 4 to 5 inches from the exhaust port, cool airflow should be felt within 30 seconds to one minute after initial amplifier turn-on. After an extended transmission, exhaust air should not be so hot as to prevent holding the hand 3 to 4 inches from the exhaust port for at least 5 seconds. Blower speed depends to some extent on a-c line voltage; if cooling appears to be marginal or inadequate, or if blower noise is excessive, contact the factory for information on adjusting blower speed.

4.2 ADJUSTMENT AND ALIGNMENT:

ALC THRESHOLD - The level of grid current at which ALC output begins to rise ("ALC threshold") is controlled by the value of R219 on control circuit board CB2. This value is factory set for normal operation into a matched load, but may be changed if necessary to satisfy a different set of operating conditions. This is best accomplished with the aid of an in-line monitoring oscilloscope, under actual operating conditions with ALC feedback in use. NOTE: Some models employ a predetermined value fixed resistor at R219, while others use a trimmer potentiometer. DO NOT IN ANY CASE OPERATE THE AMPLIFIER WITH THE TOP COVER REMOVED, OR SERIOUS DAMAGE TO TUBES OR POWER SUPPLY MAY RESULT!

BANDPASS FILTER ALIGNMENT - The bandpass output filters for the amateur 80 through 10 meter bands are factory aligned for optimum high power SSB operation into a matche d 50 ohm load. No readjustment should be attempted without first contacting the factory for information relative to providing the special cooling required to avoid tube damage during adjustment, as well as relative to access to adjustments and the actual alignment procedure itself.

4.3 TROUBLESHOOTING - Any technician familiar with high power vacuum tube linear amplifier techniques, as well as with basic solid state discrete devices, should encounter little difficulty maintaining and servicing ALPHA series linears. Circuit operation is described in SECTION 5. The following chart lists several possible problem areas and suggests probable causes and corrective actions.

TABLE III - TROUBLESHOOTING SUGGESTIONS

SYMPTOMS	PROBABLE CAUSE & CORRECTIVE ACTION
Nothing at all happens when ON switch is actuated (no fan, no HV indication).	1) Improper external a-c wiring, or external breakers or fuses open. 2) Cover interlock S5 not closed. 3) Transformer connectors P2-J2 not properly mated. 4) Fuses F1-F2 blown due to excessive average plate power input, or short circuit in high voltage power supply. Check C24, S101, T1, D101-D104.
Fan operates but low or zero HV meter indication; meter does not light.	1) Fuse F1 (only) blown ...see above. 2) Plug-in board CB2 not properly installed; defective +24 volt supply. Check +24 volt line at jack J6(AUX).
During apparently normal operation, all power is suddently cut off from amplifier (no HV). Fuses are okay, primary a-c ok.	1) Plate overload relay tripped by excessive power input. 2) Momentary interruption of primary power. Actuate ON switch to restore power.
Internal T/R relay fails to operate when transmitting; drive power feeds thru to load; HV normal and meter lamps lighted.	1) No external relay (RLY) control switching provided, or defective cable or connectors. 2) Amplifier switched to STANDBY mode. 3) IF RED "EXCESSIVE" INDICATOR IS steadily lighted, grid overcurrent relay tripped. Reset by momentarily switching exciter to receive or amplifier to STANDBY, then back.
Low power output on <u>all bands</u> in both MANUAL and BANDPASS positions.	1) Low primar y a-c line voltage. 2) Inadequate drive power. 3) Defective or damaged tube(s). 4) Severe load mismatche due to shorted cable or lo-pass filter, etc., which affects all bands.
Low power output in BANDPASS position <u>only</u>, one or more bands.	1) Excessive load SWR; out-of-band operation or bandswitch set wrong ; defective cable, lo-pass filter, antenna traps or tuner, fittings, etc. 2) Bandpass output filter(s) misaligned.
Red and/or green GRID CURRENT LED indicators light more frequently or more intensely (or less so) than normal.	1) Excessive load SWR or defect in feedline or matching system.
Distorted output signal.	1) Excessive drive power. 2) Improper tune-up; excessive load SWR in BANDPASS operation. 3) Damaged bias switch or RF sensor.

SECTION 5 - THEORY OF OPERATION

5.1 RF AMPLIFIER SECTION: Triode amplifier tubes v1 and V2 (and V3 in ALPHA 374 and ALPHA 274 with PK-1) are connected in a common grounded-grid configuration. Their indirectly-heated cathodes eliminate the need for customary filament isolation chokes. Operating and standby bias is applied as a positive voltage from cathode to grid (ground), via decoupling choke L1. Bias control circuitry is on circuit board CB2, described later.

RF excitation is fed to the tube cathodes via T/R relay contacts K4a (and, in 3-tube units, broadband transformer T2. T2 is a ferrite-toroidal-core unit which matches the 3-tube cathode input impedance to the desired 50 ohm level.)

With bandswitch S5 in any of the MANUAL positions, the plate tuning circuit is a pi-L network tuned by C26 (the manual TUNE control) and loaded by C32 (manual LOAD control).

ALPHA 374 ONLY: With S5 in any bandpass position, the manual tuning and loading controls C26 and C32 are replaced by fixed and factory preset capacitors C23-C25, C27-C31, C33, and C40. In combination with the corresponding coil taps, also selected by S5, these components constitute preset bandpass filters for each amateur band. Each transforms a nominal 50 ohmresistive load to the required plate load impedance across the band, as well as suppressing the second and higher order harmonics in the output signal.

While the load impedance seen by the tube plates varies somewhat across the width of each band, with normal line voltage and a matched load the ALPHA 374 in BANDPASS positions is generally capable of delivering at least 500 watts of carrier output (CW/TUNE mode) and 1000 watts of PEP SSB voice output (SSB mode) across each band.

BOTH MODELS: CAUTION NOTE - The Eimac 8874 tubes are rated for a maximum plate current of 500 ma each under voice modulation conditions on SSB; the limit under key-down carrier conditions is 250 ma. To avoid possible tube damage, do not operate the ALPHA 374 or ALPHA 274 key-down for more than 2-3 seconds with plate current exceeding 300-350 ma per tube. Because of power supply and tube cathode characteristics, actual power output available under SSB voice conditions may be significantly greater than that observed key-down.

Toroidal coil T3 and associated components make up a conventional rf directional coupler; C41 provides a long decay time constant which permits the corresponding RF FWD WATTS scale to be calibrated in terms of approximate repetitive peak rf power. Thus a useful indication of RF output is provided under SSB voice conditions.

Diodes D7 and D8 and associated components constitute an rf excitation detector. With rf drive of approximately 100 milliwatts, sufficient negative-going d-c is derived to actuate the electronic bias switch on circuit board CB2.

5.2 POWER SUPPLY AND FRONT PANEL: Main power relay K1 is connected in a latching arrangement controlled by momentary ON-OFF switch S1. Step-start resistors R3 and R4 limit the initial inrush current (primarily due to charging of high voltage filter capacitor C24) when a-c power is applied. When the surge subsides after a few milliseconds, K2 closes and shorts out R3 and R4.

Relay K3, controlled by CW/STBY-SSB switch S2, selects primary taps on power transformer T1 to provide either high (2200 V nominal) or low (1400 V nominal) d-c plate voltage. A third pole on K3 selects the proper tap to maintain filament voltage at 6.3. An additional low voltage center-tapped winding on T1 provides power to board CB2 which contains low voltage rectifiers and regulators, bias circuits, etc.

High voltage a-c from T1 is rectified by full wave bridge D101 through D104 and filtered by oil filled capacitor C24. R101 through R105 provide a safety bleed-down of C24 when power is removed; R106-R109 constitute a precision (1%) multiplier for HV metering via multimeter M1. (These rectifiers and resistors are located on circuit board CB1, which is mounted directly atop the insulator studs of C24.

Resistor R5 is a surge suppressor which limits the maximum possible momentary peak current which can flow as the result of any high voltage (B+) to ground fault, and protective diode D4 provides a fault current return path around the bias circuits. In the event of such a high voltage to ground fault, the voltage drop across R5 is reduced by R110 and D105 to a maximum of 51 volts, suitable for actuation of the plate overcurrent relay located on CB2.

Pushbutton switch S3 selects the circuit parameter to be displayed by multimeter M1; when the PEP button is depressed, the second pole of switch S2 (CW/TUNE-SSB) establishes the appropriate meter scale factor.

AUX jack J6 may be used as a convenient external test point for checking the +24 volt d-c line, as well as to supply a few milliamperes of current for operation of an external electronic T/R switch or other option.

5.3 CONTROL CIRCUIT BOARD CB2: Plug-in circuit board CB2 contains low voltage rectifiers and regulators, bias, grid and plate metering, warmup time delay, ALC, and overload monitoring and control circuitry.

PLATE CURRENT METERING, PEP METERING, PLATE OVERCURRENT RELAY - Plate current (returning from tube cathodes to B-) flows through R201, R202, D205, L201, and K201/R240. The voltage drop across R202 is isolated by D204 and used to meter d-c plate current with a suitable multiplier resistor, R204. (Diode D205 provides a voltage drop to compensate for the drop across D204 (and D201 and D203).)

The drop across R202 is also isolated by D203 and used to charge C202; combined with multiplier resistor R205, this provides a fast-attack-slow-decay signal proportional to peak plate current. With suitable choice of scale factor multiplier resistors R205 (SSB mode) and R205 plus R206 (CW/TUNE mode) to compensate for nominal plate voltage, a useful meter indication of peak d-c power input is achieved. Because C202 cannot charge instantly to the full peak value of the voltage drop across R202, the meter does not respond to isolated signal peaks, but rather to repeated or sustained values of peak plate current.

Capacitor C201 is charged via D201 to the value of voltage drop across R201 plus R202. Its discharge time constant is approximately 0.5 second. When the voltage across C201 decays to slightly less than that across C202 (approximately one -half second after both are charged by a plate current peak), D202 goes into conduction and C202 discharges through R203 with a time constant of approximately one second. Prior to D202 conduction the discharge time constant of C202/R205 is about 7 seconds, thus for approximately one-half second after a current peak occurs the PEP meter appears to "hang" at its peak value, then discharge rapidly when D202 begins to conduct.

Resistor R240 is selected in production so that a steady or momentary crest of plate current of approximately 1.5 amperes is sufficient to actuate the relay, K201. Contacts K201a then momentarily remove coil voltage from primary power relay K1, unlatching it and disconnecting all a-c power from the amplifier. As previously mentioned, zener diode D105 protects K201 from extreme coil voltage surges in the event of a high voltage fault, while still permitting the overcurrent relay to trip quickly and protect the amplifier.

LOW VOLTAGE POWER SUPPLIES - Low voltage a-c from T1 is rectified by D217 and D219 to yield approximately 25 to 40 volts d-c after filtering by C208. Regulated +24 vdc is pr ovided by three-terminal monolithic voltage regulator IC1 (this voltage may drop to slightly less than 24 vdc in the CW/TUNE

condition; normal operation is not affected in any way).

D216 and D218 provide a negative d-c voltage which is filtered by C209 and regulated to -18 volts or less (for the ALC amplifier) by zener diode D225.

TIME DELAY AND "READY" CIRCUIT - At initial power turn-on, +24vdc becomes available at the output of regulator IC1. Voltage divider R235-R236 provides approximately +18 vdc to supply time delay MOSFET Q209. Timing capacitor C211 charges through R238 with a time constant of approximately 70 seconds; Q209 provides an extremely high impedance load which has negligible effect on timing, and drives the coil of delay relay K203 via D220 and R237. Approximately one minute after turn-on, this coil voltage reaches the pull-in level and contacts K203a close, latching the relay via R239 and D221. +24 vdc is thus applied to the "ready" line via PCB pin 13, lighting the meter lamps and providing power to the T/R relay and bias switching cir cuits via STANDBY-OPERATE switch S4.

BIAS CIRCUITS - +24 vdc from the regulator is applied to the tube cathodes via R207, cutting off plate current. With S4 open (amplifier in STANDBY), no control voltages are applied to transistors Q201 through Q204 and all remain "off." When S4 is closed (OPERATE) but no external short is applied to the relay line via RLY jack J3, various operating voltages are applied to these transistors via pin 16, contacts K202a, and relay coil K4 between pins 17 and 18; all transistors are biased in such a way that Q202 and Q203 remain "off," however, so that the full +24 volts bias remains on the tube cathodes.

Placement of a short across RLY jack J3 to put the amplifier in the transmit condition drops voltage at pin 17 from +24 to zero, cutting off Q204; Q203 is thus driven to saturation by +24 volts from the "hot" side of the T/R relay line (pin 18) via R208. Under this condition, R207 and R209 operate as a voltage divider to reduce tube cathode bias (which is applied via D206 and pin 2) to a value of about 10-12 volts; this bias level maintains the tubes at plate current cutoff with low plate voltage in the CW/TUNE mode, but allow a small amount of plate current to flow in the higher-plate-voltage SSB mode. Biasing the tubes slightly into conduction under idling conditions in the SSB-transmit condition prevents a threshold "switching" effect under very low drive signal conditions, yet results in extremely low power waste and heat dissipation with no signal. Excellent linearity is achieved on SSB by lowering tube bias further when an excitation signal is present. Negative d-c output from the rf excitation sensor in the rf amplifier section is applied to Q201 via pin 11; when drive power reaches about 100 milliwatts, Q201 is cut off Q202 switches fully on so that its collector voltage drops to very near zero. Tube operating bias is then only slightly greater than the 5.1 volt drop of zener D222.

Bias switch Q202 is arranged to function as a maximum grid current clamp, providing a measure of protection against severe over-excitation of the amplifier. Diodes D207 thru D209 clamp the base of Q202 to a maximum level of +1.8 vdc. The primary grid current return path for the amplifier is via D222 and the collector-emitter of Q202, through R217 to ground (other resistors connected to the emitter are of much larger value than R217 and have negligible effect). As the IR drop across R217 due to grid current approaches one volt, with Q202's base clamped to +1.8 volts, Q202 goes out of the saturated condition and its collector-emitter drop begins to rise, increasing the amplifier cathode bias. If amplifier excitation is increased sufficiently to drive grid current above about 175 to 200 ma, the collector voltage on Q202 rises abruptly and any additional grid current returns to ground via D210, D223, R226, D213, K202, and the external relay line via pin 17. Continued increase in excitation and grid current will actuate K202, closing the normally open contacts of K202a and latching the relay via D212. The latching voltage from K202a (N.O.) is also applied to Q208 (see discussion below), turning on the red EXCESSIVE LED indicator on the front panel. Actuation of K202 removes +24 vdc from the T/R relay line at pin 18, latching the amplifier in the receive condition. The grid overcurrent relay (K202) may be reset to normal by (a) switching the amplifier momentarily to STANDBY which removes +24 volts from pin 16 <u>or</u> (b) momentarily returning the exciter to receive, thus opening the external relay line (disconnecting pin 17 from ground) and removing the ground return for coil K202.

<u>LED DRIVERS (RED AND GREEN INDICATORS)</u> - Bias switch Q202, as just described above, is designed to limit amplifier grid curr ent to about 200 ma, while the normal range of maximum operating grid current does not normally exceed 100-150 ma. The value of R217 is such that the drop across it reaches about 0.7 volts - sufficient to turn "on" Q205 - when grid current reaches the level at which reasonable amplifier efficiency is achieved. Typical values (which may, however, vary somewhat from amplifier to amplifier) are about 7 ohms for R217 and thus 100 ma grid current to turn on Q205. The collector current of Q205 flows through green (NORMAL) LED D6, so that the initial threshold of D6 illumination indicates grid current approaching an efficient "peak sig nal" level.

Q208 controls the red (EXCESSIVE) LED indicator in identical fashion, except that voltage divider R219-R223 delays the transistors turn-on threshold so that red LED D5 lights at a higher grid current than does D6 initially. R219 is factory adjusted (or selected, if a fixed resistor) so that red LED (and ALC - see below) threshold occurs as amplifier grid current just approaches the area where linearity begins to deteriorate.

The grid current at which red LED D5 begins to turn on is typically 20-30% greater than that for the green LED D6... commonly 130 ma. Because of amplifier tube characteristic variations, some variation in "normal" grid current levels occurs between different amplifiers; the values of R217, R219, and R216 are established in production to compensate for such variations.

AUTOMATIC LEVEL CONTROL (ALC) - Transistors Q206 and Q207 generate a negative-going d-c output voltage as amplifier grid current rises above the threshold established by R219, as previously described in the case of the red LED indicator circuit. With grid current below the threshold level, Q206 is cut off; Q207 is driven into conduction via R230 and D224, so that its emitter is clamped a small fraction of a volt negative with respect to ground. When the voltage across R223 reaches about 0.7 volts (at approximately the same grid current required for red LED threshold), Q206 begins to conduct. The decreasing positive voltage at Q206's collector allows the base of Q207 to go negative, followed by its emitter and the ALC output at pin 9. At a grid current about 20% above ALC (and red LED) threshold, Q206 is fully "on" with its collector clamped near zero voltage; the base of Q207 is then clamped at about -18 volts by zener D224, and the (unloaded) ALC output voltage is about the same. Maximum ALC voltage in actual operation depends to some extent on the "knee" characteristics of D224 and on the value of load acros s the ALC output jack, but a maximum swing of 0 to -10 volts is typically available.

GRID CURRENT METERING - Grid current is metered by measuring the IR drop across R217, with R216 selected to provide a suitable scale factor.

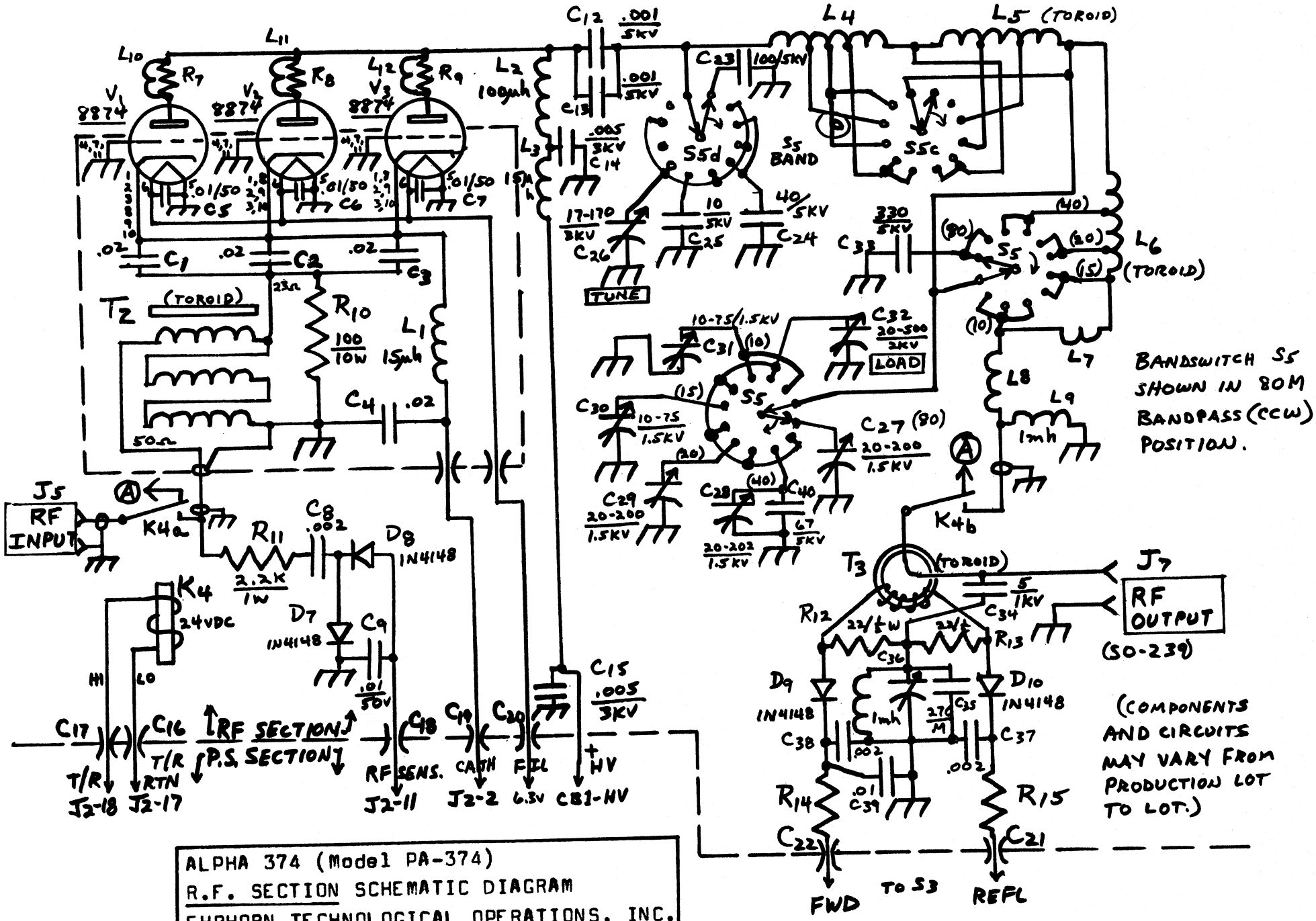

BANDSWITCH S5 SHOWN IN 80M BANDPASS (CCW) POSITION.

(COMPONENTS AND CIRCUITS MAY VARY FROM PRODUCTION LOT TO LOT.)

ALPHA 374 (Model PA-374)
R.F. SECTION SCHEMATIC DIAGRAM
EHRHORN TECHNOLOGICAL OPERATIONS, INC.
Brooksville, FL 33512 8-74 a

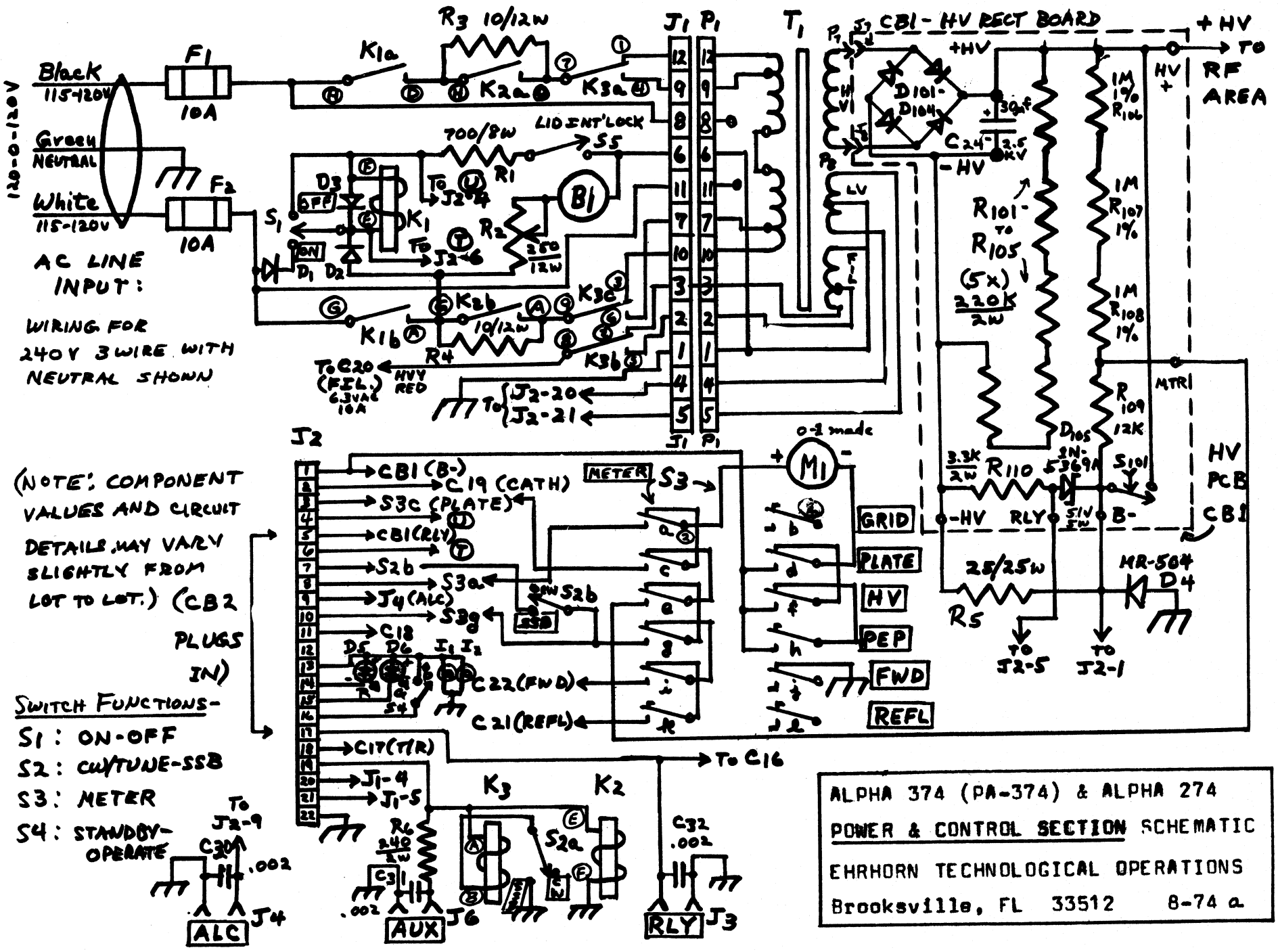
Black
115-120V
Green
NEUTRAL
White
115-120V
120-0-120V
F1
10A
F2
10A
AC LINE INPUT:
WIRING FOR 240V 3 WIRE WITH NEUTRAL SHOWN
R3 10/12W
K1a
K2a
K3a
LID INT'LOCK
S5
700/8W
R1
B1
D3
OFF
ON
D1
D2
K1
S1
R2
250/12W
K2b
K3c
K1b
10/12W
R4
K3b
To C20 (FIL.) 6.3VAC 10A
HVY RED
To J2-20
To J2-21
J1
P1
T1
CB1-HV RECT BOARD
+HV
TO RF AREA
D101-D104
30µf
C24
2.5 KV
-HV
1M 1% R106
1M R107 1%
1M R108 1%
R101-R105 (5x) 220K 2W
R109 12K
MTR1
HV PCB CB1
3.3K 2W
R110
D105 2N-5369A
S101
-HV
RLY
B-
25/25W
R5
MR-504 D4
To J2-5
To J2-1
J2
CB1 (B-)
C19 (CATH)
S3c (PLATE)
CB1 (RLY)
S2b
S3a
J4 (ALC)
S3g
C18
C22 (FWD)
C21 (REFL)
C17 (T/R)
J1-4
J1-5
METER
S3
M1
0-1 made
GRID
PLATE
HV
PEP
FWD
REFL
To C16
(NOTE: COMPONENT VALUES AND CIRCUIT DETAILS MAY VARY SLIGHTLY FROM LOT TO LOT.) (CB2 PLUGS IN)
SWITCH FUNCTIONS-
S1: ON-OFF
S2: CW/TUNE-SSB
S3: METER
S4: STANDBY-OPERATE
To J2-9
C30
.002
ALC
J4
R6 240 2W
C31
.002
AUX
J6
K3
K2
S2a
RLY
J3
C32 .002
ALPHA 374 (PA-374) & ALPHA 274
POWER & CONTROL SECTION SCHEMATIC
EHRHORN TECHNOLOGICAL OPERATIONS
Brooksville, FL 33512 8-74 a

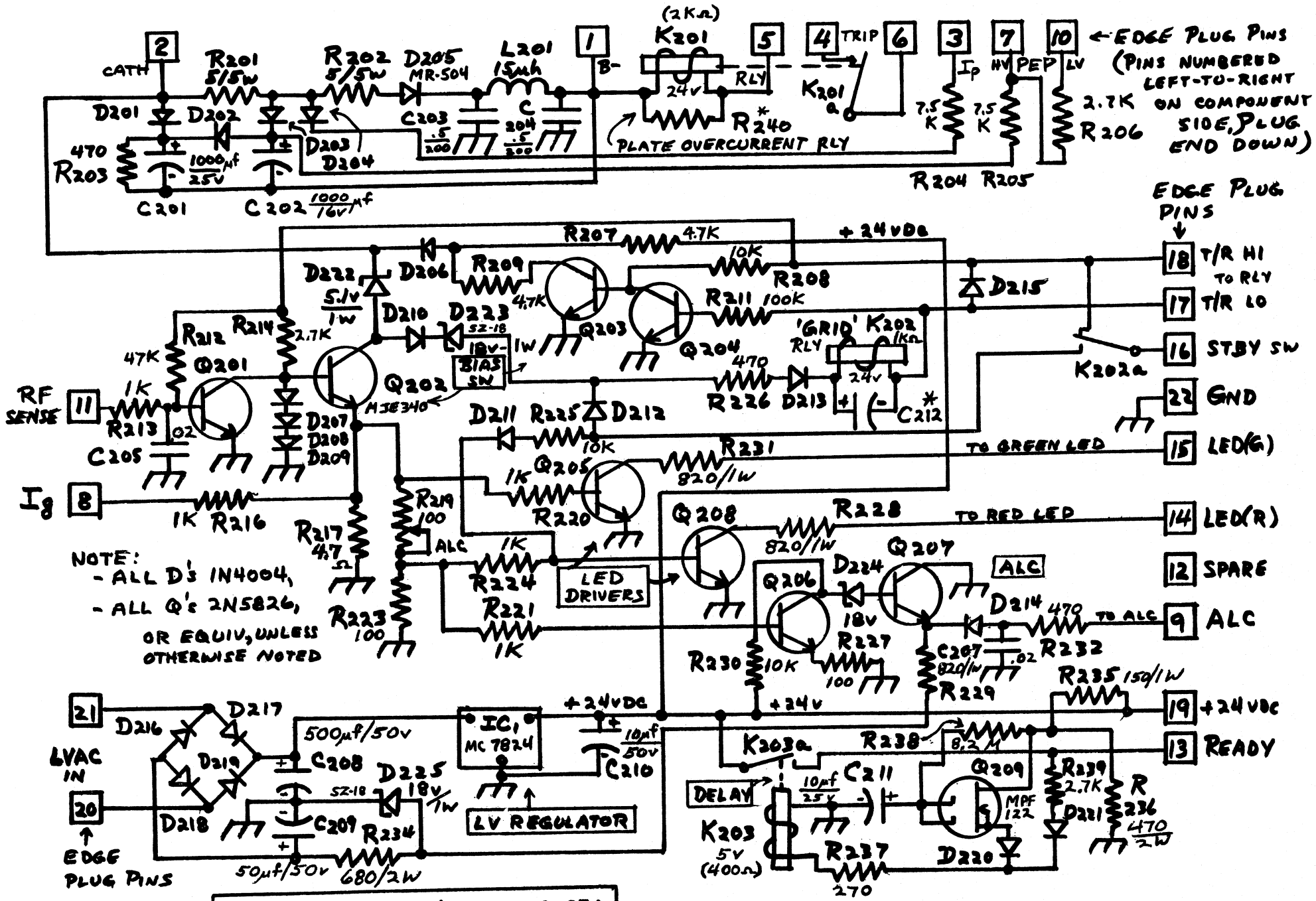

ALPHA 374 (PA-374) & ALPHA 274
PLUG-IN BOARD CB2 SCHEMATIC
EHRHORN TECHNOLOGICAL OPERATIONS, INC. Brooksville, FL 33512

SECTION 7 - STANDARD ELECTRICAL PARTS

7.1 RF SECTION

CIRCUIT SYMBOL	DESCRIPTION
C1, C2, C3, C4	.01 to .05 mfd/500 volt disc ceramic
C5, C6, C7, C9, C39	.01 to .05 mfd/50 volt disc ceramic
C8, C37, C38	.001 to .005 mfd/500 volt disc cer.
C10, C11, C16-C22	2300 pf/500 volt feedthru ceramic
C12, C13	1000 pf/5 KV transmitting ceramic
C14, C15	.002 to .005 mfd/3 KV disc ceramic
C23	100 pf ± 10%/5 KV transmitting cer.
C24	40 pf ± 10%/5 KV transmitting cer.
C25	10 pf ± 10%/5 KV transmitting cer.
C26	15-170 pf/3 KV air variable (TUNE)
C27, C28, C29	20-200 pf/1.5 KV air variable
C30, C31	10-75 pf/1.5 KV air variable
C32	20-500 pf/2 KV air variable (LOAD)
C33	330 pf/5 KV transmitting cer. or mica
C34	5 pf/ 1 KV disc ceramic
C35	270 pf/500 V dipped silver mica
C36	7-100 pf mica compression trimmer
C40	50 to 100 pf/5 KV transmitting cer.
D7 through D10	1N4148, 1N914B, or equivalent
K4	DPDT 15 amp., 26 VDC; Allied BOT6-D
L1, L3	15 microhenry/1 ampere choke
L9	1.0 to 2.5 mhy/100 madc RF choke
L13	1 mhy miniature molded choke
R7, R8, R9	100 ohm/ 2 watt composition
R10	100 ohm/10 watt non-inductive
R11	2.2 K/1 watt composition
R12, R13	22 ohm/½ watt composition
R14, R15	Selected in production; ¼ w. comp.
V1, V2, V3	Eimac 8874 ceramic-metal air cooled

7.2 POWER SUPPLY AND PANEL (EXCEPT CB2)

CIRCUIT SYMBOL	DESCRIPTION
B1	Nominal 115 CFM; Howard 4450 fan
C24 (or C41)	30 mfd/2500 volt oil filled
C30, C31, C32	.001 to .005 mfd/500 V disc ceramic (may also be designated C37, C38, C39)
D1, D2, D3	1N4004 or equal (400 PIV/1 Amp. silicon)
D4	400 PIV/3 amp (100 A surge); Motorola MR-504
D5	Red light emitting diode; Motorola MLED-650
D6	Green LED; Motorola MLED-750
D101 through D104	3 KV PIV/silicon stack; special
D105	51 volt/5 watt zener; 1N5369 or equivalent
F1, F2	10 amp/250 volt; Littelfuse 3AB or Buss ABC
J1	Cinch-Jones S-312-CCT or equivalent
K1, K2	DPST or DPDT/15 A/26 VDC; Allied BOT6-D
K3	3PDT/10 A/ 24-26 VDC; P-B type KUP
M1	0-1 madc full scale, taut-band; Modutec
P1	Cinch-Jones P-312-CCT or equivalent
R1	700 ohm/8 watt wirewound
R2	250 ohm/10 watt adjustable
R3, R4	10 ohm/ 12 watt wirewound
R5	25 ohm/25 or 50 watt wirewound
R6	240 ohm/2 watt (220 to 330 ohm okay)
R101 thru R105	220 K/2 watt composition
R106 thru R108	1 Meg/1% type RN-65D
R109	4.7 to 27K/¼ watt composition
R110	3.3K/2 watt composition (may vary lot-to-lot)
S1	SPDT momentary; Cutler-Hammer 7509K5 or equal
S2, S4	DPST toggle; Cutler-Hammer 8370K27C or equal
S3	Special pushbutton assembly; Centralab
S5	SPDT interlock assembly; Microswitch 17AC1T