MODEL 599

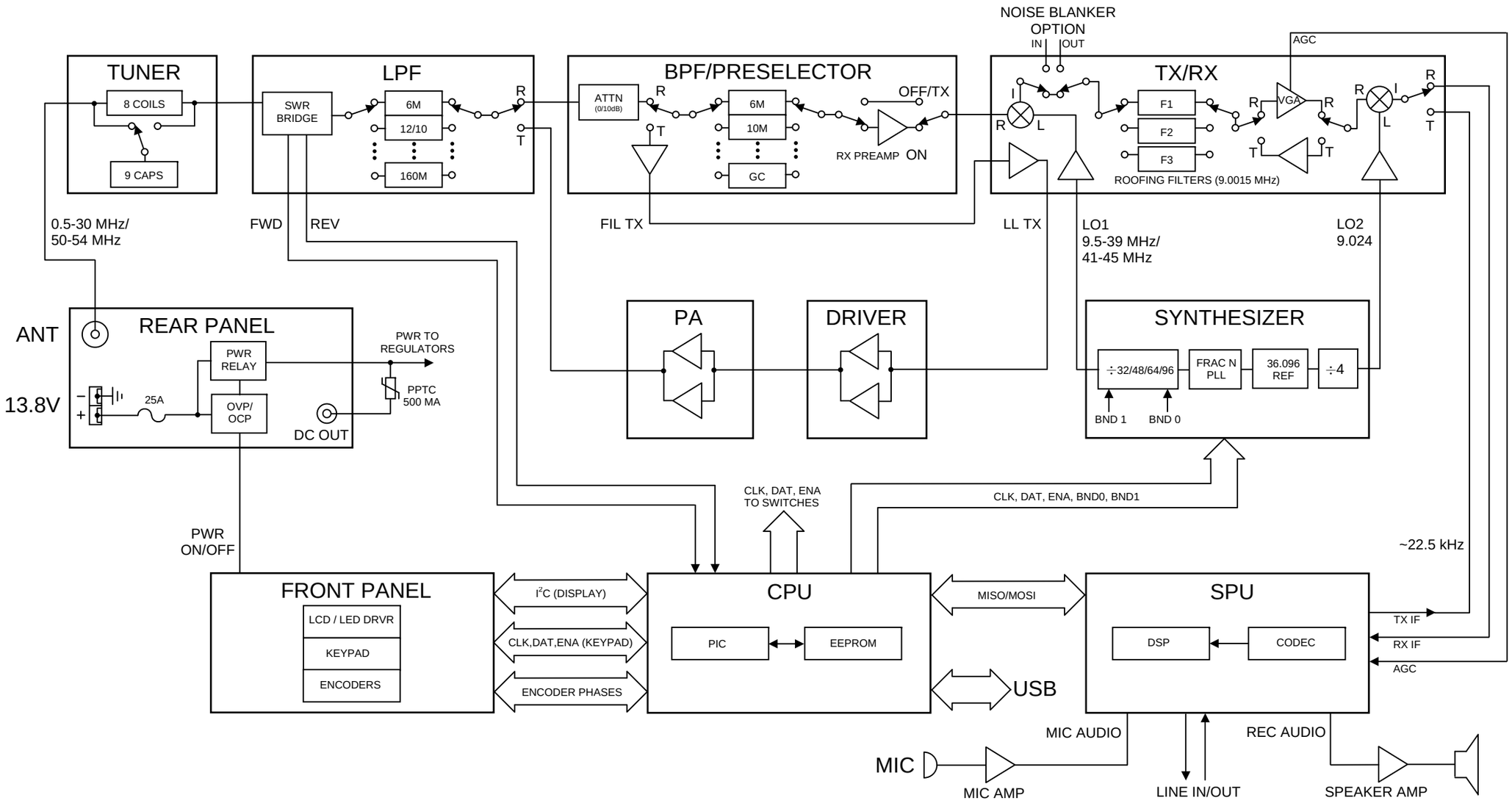
TUNER
8 COILS
9 CAPS
LPF
SWR BRIDGE
6M
12/10
160M
R
T
BPF/PRESELECTOR
ATTN (0/10dB)
6M
10M
GC
OFF/TX
RX PREAMP
ON
NOISE BLANKER OPTION
IN
OUT
TX/RX
AGC
F1
F2
F3
ROOFING FILTERS (9.0015 MHz)
VGA
I
L
0.5-30 MHz/
50-54 MHz
FWD
REV
FIL TX
LL TX
LO1
9.5-39 MHz/
41-45 MHz
LO2
9.024
ANT
REAR PANEL
PWR RELAY
OVP/ OCP
25A
13.8V
DC OUT
PWR TO REGULATORS
PPTC 500 MA
PA
DRIVER
SYNTHESIZER
÷32/48/64/96
FRAC N PLL
36.096 REF
÷4
BND 1
BND 0
CLK, DAT, ENA TO SWITCHES
CLK, DAT, ENA, BND0, BND1
PWR ON/OFF
~22.5 kHz
FRONT PANEL
LCD / LED DRVR
KEYPAD
ENCODERS
I²C (DISPLAY)
CLK,DAT,ENA (KEYPAD)
ENCODER PHASES
CPU
PIC
EEPROM
MISO/MOSI
USB
SPU
DSP
CODEC
TX IF
RX IF
AGC
MIC AUDIO
REC AUDIO
MIC
MIC AMP
LINE IN/OUT
SPEAKER AMP